2012 Pogo DSTF Construction and Maintenance Plan

Prepared by:

Sumitomo Metal Mining Pogo LLC
P.O. Box 145
Delta Junction, Alaska 99737

March 2012

Table of Contents

1.0 INTRODUCTION 1
1.1 Objective 1
1.2 Document Control and Responsibility 2
2.0 FACILITY DESCRIPTIONS 3
2.1 Major Components 3
2.1.1 Flow-Through Drains 3
2.1.2 Starter Berm and Toe Berm 5
2.1.3 Shell Area 5
2.1.4 General Placement Area (GPA) 6
2.2 Environmental Management 6
2.2.1 Water Management 6
2.2.2 Sedimentation Control 7
2.2.3 Dust Control 7
3.0 CONSTRUCTION DESIGN CRITERIA 8
3.1 Placement Schedule 8
3.2 Tailings Characterization 10
3.3 Development Rock Characterization 10
3.4 Structural Stability Evaluation 11
3.4.1 Design Criteria 11
3.4.2 Material Strength Parameters 12
3.4.3 Stability Analysis 14
3.4.4 Results 15
4.0 COMPACTION TEST IN MARCH 2011 17
4.1 Methodology 17
4.2 Results 18
4.2.1 Soil Temperatures and Frost Penetration 18
4.2.2 Material Properties and Field Density Measurements 18
4.2.3 Shear Strength 19
4.2.4 Major Findings from Compaction Test in March 2011 20
5.0 CONSTRUCTION PROCEDURES 21
5.1 General Placement Area 21
5.1.1 Shell 1 Construction 21
5.1.2 Flow-Through Drain and Perimeter Preparation 21
5.1.3 Drystack Tailings Placement 21
5.1.4 Mineralized Rock Placement 22
5.2 Shell Area 22
5.2.1 Construction Period 22
5.2.2 Flow-Through Drain and Toe Berm 23

5.2.3 Shell Construction Procedures 23
6.0 MONITORING 25
6.1 Geotechnical Monitoring 25
6.1.1 Geotechnical Monitoring for Shell Construction 25
6.2 Annual Survey 26
6.3 Reporting 26
7.0 INSPECTION 28
7.1 Weekly Inspection 28
7.2 Occasional Inspection 28
8.0 REFERENCES 29

List of Tables

Table 1.1: Revisions i
Table 1.2: Table of Significant Changes ii
Table 3.1: Material Placement Schedule at the DSTF* 9
Table 3.2: Geotechnical Properties of Drystack Tailings 10
Table 3.3: Design Criteria for Stability Analyses 12
Table 3.4: Material Properties Used for Stability Analysis 13
Table 3.5: Friction Angles of Materials Used for Stability Analysis 15
Table 3.6: Factor of Safety with Phreatic Surface 10 ft Below Surface 16
Table 3.7: Factor of Safety with Phreatic Surface at Original Ground 16
Table 3.8: Factor of Safety with Phreatic Surface Near Crest Elevation 16
Table 4.1: Summary of Soil Temperature of Dumped Tailings Piles 18
Table 4.2: Laboratory Tests Results – Material Properties 19
Table 4.3: Field Density Measurements 19
Table 4.4: Summary of Direct Shear Results 20
Table 6.1: Geotechnical Monitoring Items during Shell Construction 27

List of Figures

Figure 1: General Configuration of Drystack Tailings Facility (SRK, 2011a) 4
Figure 2: Typical Cross Section of Flow-Through Drain 5
Figure 3: Typical Cross Section of Shell 2 and Shell 3 6

List of Drawings

Drawing 1: DSTF Plan and Section End of 2010
Drawing 2: DSTF Plan and Section End of 2011
Drawing 3: DSTF Plan and Section End of 2012
Drawing 4: DSTF Plan and Section End of 2013
Drawing 5: DSTF Plan and Section End of 2014
Drawing 6: DSTF Plan and Section End of 2015
Drawing 7: DSTF Plan and Section End of 2016
Drawing 8: DSTF Plan and Section End of 2017
Drawing 9.1: DSTF Plan and Section (20 Mtons)
Drawing 10: Failure Surface Analyzed for Expanded DSTF

List of Appendices

Appendix A: DSTF Shell Geotechnical Monitoring Data Sheet
Appendix B: Weekly Inspection Form
Appendix C: Drawings

Table 1.1: Revisions

2012 Pogo DSTF Construction and Maintenance Plan Revisions			
Revision #	**Date**	**Change**	**By**
1	February 2012	Addition to D-Wing Dorm at Lower Camp	Pogo
2	March 2012	DSTF Expansion from 7.5 to 20 Mtons and new diversion ditch and haul road	Pogo

Table 1.2: Table of Significant Changes

Revision #	Change Requested By	Description	Affected Section
1	Pogo	Add Dorm to Lower Camp	No effect
2	Pogo	Expand DSTF to 20 million ton capacity, build new diversion ditch and haul road, and close existing diversion ditch.	All Sections
3			
4			
5			
6			
7			
8			
9			
10			

1.0 INTRODUCTION

1.1 Objective

Sumitomo Metal Mining Pogo LLC (SMM Pogo) is the operator of the Pogo gold mine, located 38 miles northeast of Delta Junction, Alaska.

The Drystack Tailings Facility (DSTF) has been in operation since February 2006. Through 2011, about 5.8 million tons (Mtons) of material has been placed, which includes 3.5 Mtons of drystack tailings and 2.3 Mtons of waste rock. The capacity of the current facility is estimated to be about 20 Mtons (2012 POO Rev 2).

Pogo's Waste Management Permit 2011DB0012 issued by the Alaska Department of Environmental Conservation (ADEC) on February 23, 2012 approves placement of materials in the DSTF up to 20 Mtons. Pogo's 404 Permit (POA-1996-211-M8) as amended by the US Army Engineer District, Alaska Regulatory Division on February 23, 2012 approves the construction of a new diversion ditch and haul road and extends the permit until 2017.

The DSTF was originally designed by AMEC (AMEC, 2004), and the Operating, Maintenance and Surveillance (OMS) Manual was issued in January 2006 by AMEC (AMEC, 2006) as a guidance document for the construction of the DSTF. It was revised by AMEC in December 2007 (AMEC, 2007). The OMS Manual was revised by Pogo and renamed the DSTF Construction and Maintenance Plan in 2011. It should be noted that the geochemical monitoring plan is described in the **2012 Pogo Mine Monitoring Plan** (Pogo, 2012).

SRK Consulting (Canada) Inc. (SRK) conducted a preliminary DSTF study in 2011. The study includes an update of the DSTF material balance and an assessment of the structural stability of the expanded DSTF. Pogo submitted the report, titled "Pogo Mine Dry Stack Tailings Facility Expansion Preliminary Study" to ADNR on May 17, 2011 (SRK, 2011a). In order to place more than 7.5 Mtons of material in the DSTF, a new diversion ditch and haul road must be constructed. The final DSTF diversion ditch and haul road design was prepared by SRK. Construction is planned in three phases: Phase I: Construct new North Diversion Ditch and Haul Road; Phase II: Construct new South Diversion Ditch: and Phase III: Close Existing Diversion Ditch. Pogo is prohibited from placing tailings over the existing diversion ditch until obtaining approval from ADNR.

1.2 Document Control and Responsibility

The Safety, Health and Environmental Manager is responsible for the preparation and administration of this Plan. Any revisions or updates to the Plan shall be submitted to Alaska Department of Natural Resources (ADNR).

The Maintenance Manager is responsible for the construction of the DSTF. The site specific Standard of Procedure (SOP) will be established in accordance with this Plan and will be informed to all relevant personnel.

The Safety, Health and Environmental Manager is responsible to implement the monitoring and inspection required by this Plan, and to report to the relevant agencies.

2.0 FACILITY DESCRIPTIONS

2.1 Major Components

Figure 1 shows the plan and section views of the DSTF as of end of 2010. The major components of DSTF include:

- Flow-Through Drains;
- Starter Berm and Toe Berm;
- Shell Area; and
- General Placement Area (GPA).

2.1.1 Flow-Through Drains

All runoff in and around the DSTF is directed to the RTP by means of a network of drains. Flow-through drains are constructed in the existing stream valleys within the DSTF area to augment the existing drainage courses and allow them to pass runoff under the stack. The drains are extended upstream of the existing stream as the elevation of GPA rises.

Figure 2 shows the cross-section of the flow-through drains. The rock fill used in the flow-through drains is between 12 inch and 36 inch in size, and covered with a filter material to prevent fines migrating in from the drystack tailings. The rock fill is placed at about 1H:1V, resulting in a drain base width of 21 feet (ft), crest width of 9 ft and height of 6 ft.

The filter of flow-through drain consists of two layers: Filter 1 and Filter 2. The sand (0.04 inch to 0.2 inch in size) should be used for Filter 1, and the gravel (0.2 inch to 4 inch in size) should be used for Filter 2.

The corresponding flow capacity of the flow-through drains are calculated to be approximately 120 times the daily average flow of 0.47 cubic feet per second (cfs) or 200 gallons per minute (gpm) measured at the United States Geological Survey gauge on Liese Creek, and this is approximately equivalent to a 1:10,000-year/24-hour storm event with no allowance for freeboard and without the benefits of the diversion ditch.

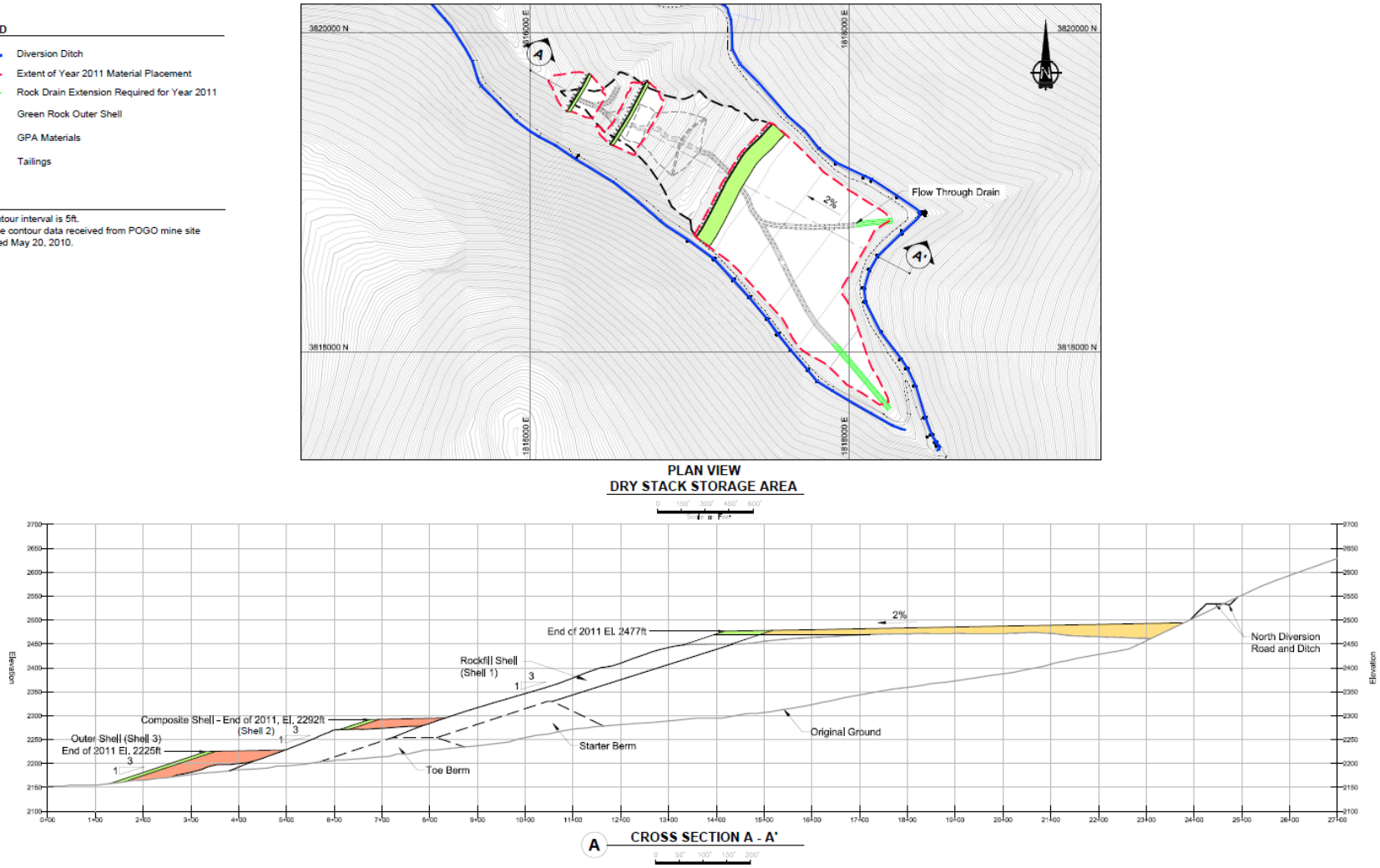

Figure 1: General Configuration of Drystack Tailings Facility (SRK, 2011a)

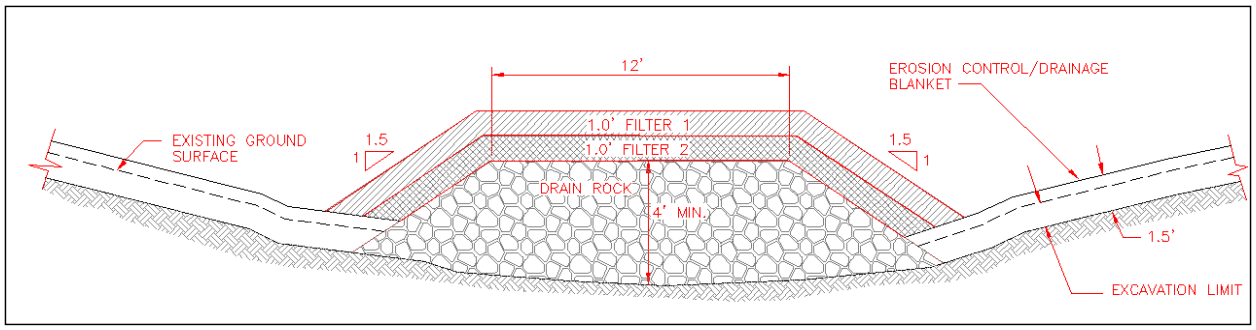

Figure 2: Typical Cross Section of Flow-Through Drain

2.1.2 Starter Berm and Toe Berm

The starter berm was constructed as the initial containment for the GPA with the material from nearby colluvium excavations. The toe berm, downstream of the starter berm was constructed of non-mineralized rock and acts as a foundation of the shell area. The toe berm was extended to downstream before the construction of the second and third shell.

2.1.3 Shell Area

There are three shells on the DSTF. The first shell (Shell 1) was constructed using non-mineralized rock only to a width of 100 ft on the 3:1 slope. The haul road was constructed on the Shell 1. The second shell (Shell 2), which has been constructed since 2009, is a composite shell which consists of non-mineralized rock and drystack tailings. Non-mineralized rock is placed at the face slope to a width of 20 feet, and then the drystack tailings is placed inside of the non-mineralized rock and compacted (see **Figure 3**). The construction of the third shell (Shell 3) commenced in 2011 using the same method as Shell 2. The width of the Shell 2 and Shell 3 is about 180 ft and 150 ft, respectively.

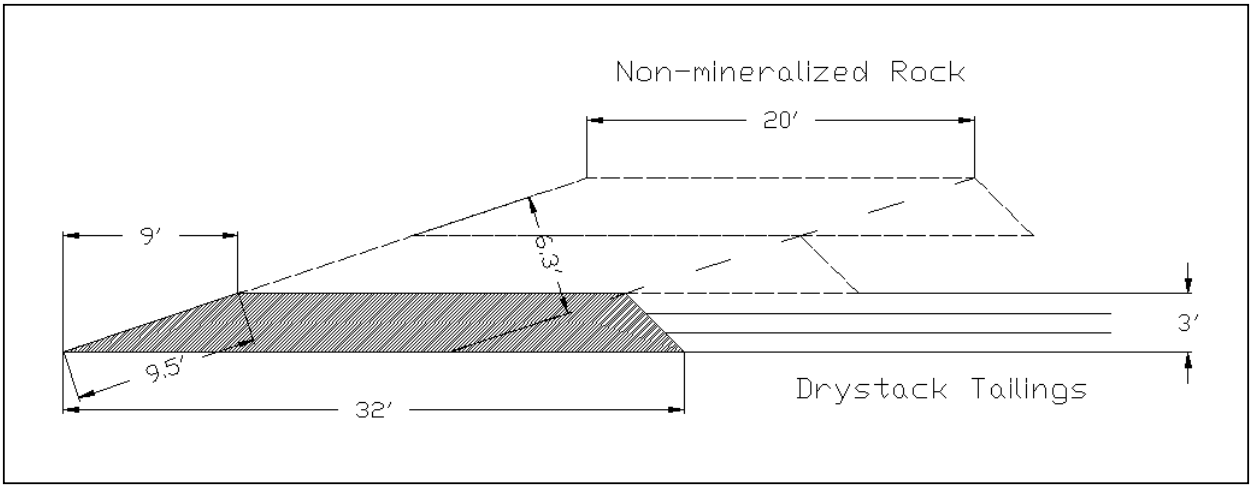

Figure 3: Typical Cross Section of Shell 2 and Shell 3

2.1.4 General Placement Area (GPA)

Drystack tailings and mineralized development rock is co-disposed in the GPA. The mineralized rock is encapsulated in the tailings to minimize the oxidation of any sulfide minerals present. The mineralized rock may not be placed within 50 ft from the perimeter of DSTF.

The non-mineralized waste rock is placed at the perimeter of DSTF to allow any runoff from precipitation that bypasses the diversion ditch above the site to flow into the flow-through drains. All flows or seepage from the drystack is collected in the Recycle Tailings Pond (RTP).

2.2 Environmental Management

2.2.1 Water Management

The diversion ditch was constructed around the DSTF to divert surface, and near surface, runoff around the DSTF, so that such water becomes “non-contact.” The diverted water is routed to the Liese Creek downstream of the RTP.

Runoff down gradient of the diversion ditch and DSTF seepage are considered “mine-contacted.” These waters are routed to a flow-through drain and into the RTP.

2.2.2 Sedimentation Control

The drystack tailings erosion translates into a sediment load in the RTP, thus specific sedimentation control measures are used to keep erosion to a minimum:

- The slope of each shell is covered with non-mineralized rock, which minimizes the erosion of drystack tailings;
- The surface of GPA has two percent slopes to limit erosion on the tailings; and
- The materials dumped on the DSTF are compacted as soon as possible.

2.2.3 Dust Control

Tailings have the potential to create dust, especially when they have been frozen or desiccated by the sun. Best management practices are used to control dust during drystack operations such as; compacting the tailings, controlling traffic on the drystack, and limiting the use of equipment to active placement area(s) only. Summer moisture from rainfall assists in keeping the surface moisture content within an acceptable range although prolonged periods of warm weather with low humidity may require building silt fences around non-active placement areas.

3.0 CONSTRUCTION DESIGN CRITERIA

3.1 Placement Schedule

The placement schedule was updated in December 2010, based on the as-built survey data from September 2010 and the life of mine plan issued on January 2010. Operational experience from building the shell during the 2010 summer season was also considered. **Table 3.1** shows the placement schedule between 2011 and 2017. Major assumptions used for scheduling are as follows:

- Dry densities of the compacted materials are assumed based on the in-situ measurements and engineering judgments. The calculated volume using the tonnage record and the assumed dry densities shows good correlation with the surveyed volume. As of September 2010, the surveyed volume of DSTF was about 76.0 million cubic feet (ft^3). The calculated volume from the tonnage record was 79.0 million ft^3. The discrepancy between these volumes is less than 4 percent (%).

  <u>Assumed material dry densities for scheduling</u>

  - Drystack tailings (compacted): 104 lb/ft^3 or 19.2 ft^3/ton; and
  - Waste rock (compacted): 125 lb/ft^3 or 16.0 ft^3/ton.

- The tonnage of drystack tailings placed on the Shell area is limited to 93,000 – 98,000 tons per year, assuming that:
  - The shell can be constructed for four months in a year; and
  - During the construction season, 60% of drystack tailings produced at the Mill will be placed on the Shell.

- All waste rocks including mineralized rock and non-mineralized rock excavated at the underground mine will be placed at the DSTF.

In **Appendix C, Drawings 1 - 8** are the year-by-year drawings for the DSTF between 2010 and 2017. It is expected that the surface of GPA will exceed the elevation of the current diversion ditch in 2013. Pogo proposes to construct a new diversion ditch approximately 150 ft above the current diversion ditch (2012 POO Rev 2).

Table 3.1: Material Placement Schedule at the DSTF*

Year		2006-2010	2011	2012	2013	2014	2015	2016	2017	Total
Production										
Ore Milled	ton	-	944,174	920,100	920,440	920,136	920,161	920,266	143,456	**5,688,733**
Waste Rock Excavated	ton	-	464,481	459,445	264,240	188,224	147,631	155,120	34,272	**1,713,413**
Tailings Backfilled in Underground	ton	-	355,443	364,795	363,954	364,015	364,560	363,541	59,657	**2,235,966**
Material Placed at DSTF										
Drystack Tailings	ton	-	588,731	555,305	556,486	556,121	555,601	556,725	83,799	**3,452,767**
Waste Rock	ton	-	464,481	459,445	264,240	188,224	147,631	155,120	34,272	**1,713,413**
Total	ton	-	1,053,212	1,014,750	820,726	744,345	703,232	711,845	118,071	**5,166,180**
Cumulative Tonnage at DSTF										
Drystack Tailings	ton	2,818,686	3,407,416	3,962,721	4,519,207	5,075,328	5,630,929	6,187,654	6,271,453	**-**
Waste Rock	ton	1,827,406	2,291,887	2,751,332	3,015,572	3,203,796	3,351,427	3,506,547	3,540,819	**-**
Total	ton	4,646,091	5,699,303	6,714,053	7,534,779	8,279,123	8,982,355	9,694,200	9,812,272	**-**
Shell Area										
Drystack Tailings	ton	-	98,122	92,551	92,748	92,687	92,600	92,787	13,967	**575,461**
Waste Rock	ton	-	25,000	25,000	25,000	25,000	25,000	25,000	25,000	**175,000**
Total	ton	-	123,122	117,551	117,748	117,687	117,600	117,787	38,967	**750,461**
General Placement Area										
Drystack Tailings	ton	-	490,609	462,754	463,738	463,434	463,001	463,937	69,833	**2,877,306**
Waste Rock	ton	-	439,481	434,445	239,240	163,224	123,631	130,120	9,272	**1,538,413**
Total	ton	-	930,090	897,199	702,978	626,658	585,632	594,057	79,105	**4,415,719**
End of Year Crest Elevation of GPA	**ft**	**2,470**	**2,477**	**2,497**	**2,510**	**2,519**	**2,528**	**2,536**	**2,538**	

* In June 2011, ADNR approved the year-round construction of the shells. This will facilitate the construction of the shells by placing 200,000-250,000 tons of material in the DSTF. However, the maximum heights of the shells are limited by the elevation of the existing diversion ditch and will not exceed the height shown in Drawing 9.1 DSTF Plan and Section until Pogo obtains approval from ADNR. Once Pogo has placed material in the shell through a winter season, this table may be updated.

3.2 Tailings Characterization

Laboratory testing of the drystack tailings were carried out in 2009 by Golder Associates. In addition, a compaction test was carried out in March 2011 to evaluate the influence of the frozen drystack tailings on compaction. **Table 3.2** summarizes the geotechnical properties of drystack tailings obtained in the 2011 tests.

Table 3.2: Geotechnical Properties of Drystack Tailings

Parameters	Properties	Testing Method	Information Source
Specific Gravity	2.56	ASTM D854-06	2011 Compaction Test
Optimum Moisture Content	15% - 16%	Standard Proctor (ASTM D-698)	2011 Compaction Test
Maximum Dry Density	109 lb/ft^3 (1.74 t/m^3)	Standard Proctor (ASTM D-698)	2011 Compaction Test
Shear Strength (Saturated)	Friction Angle 34.4 degree[(1)] Cohesion - 63 psf	Triaxial Compression Test (CU- Test) (ASTM D-4767)	Golder Associates in 2009
Direct Shear Strength (90% Compaction)	Friction Angle - 37 degree Cohesion – 140 psf	Direct Shear Test (ASTM D-3080)	2011 Compaction Test
Direct Shear Strength (95% Compaction)	Friction Angle - 39 degree Cohesion – 90 psf		
Direct Shear Strength (95% Compaction)	Friction Angle - 41 degree Cohesion – 60 psf		
Hydraulic Conductivity (saturated)	1E-07 m/s	Tri-axial Saturated Hydraulic Conductivity (ASTM D-5084-90) Flexible Wall Permeability (ASTM D-5084-Method C)	Golder Associates in 2009 2011 Compaction Test

Notes: 1. Dry densities of specimens for triaxial tests were 101 – 102 pcf (93 – 94% of maximum dry density).

3.3 Development Rock Characterization

It is assumed that development rock placed and compacted will have a dry in-place density of approximately 125 lb/ft^3 (2 t/m^3). No geotechnical laboratory testing was carried out using the development rock. The geotechnical characteristics of the development rock were estimated based on typical published values and engineering judgment for use in design.

3.4 Structural Stability Evaluation

SRK developed the construction design for the expanded DSTF with total capacity of 20 Mtons (see **Appendix C, Drawing 9.1**), and evaluated its structural stability considering the variability of pseudo-static loadings, phreatic surfaces, and strength parameter (friction angle) of materials (SRK, 2011a). This section summarizes the results of stability evaluation.

3.4.1 Design Criteria

The design criteria used for this stability analysis were consistent with those specified in the original design report (AMEC, 2004). Stability analysis of embankment slopes requires assessment of the structure's ability to withstand the effects of self-weight (static) and earthquake induced (pseudo-static) loading conditions under both operating and closure conditions. In the 2004 DSTF design, AMEC considered the minimum allowable factor of safety (FoS) under static loading conditions during operations and closure conditions to be 1.5. During pseudo-static conditions, the minimum allowable FoS was selected as 1.1.

Seismic design criteria were developed for the Pogo site during completion of the project's Feasibility Study (Teck-Pogo, 2004) and reiterated in the Recycle Tailings Pond Dam Design Report (AMEC, 2004). As described in the Pogo Feasibility Study, the near surface M7.9 seismic event that occurred on 3 November 2002 within 75 miles of Fairbanks was selected as the operating basis earthquake for the project. Seismic hazard mapping completed by the USGS after the 2002 event indicated that a peak ground acceleration (PGA) of 0.1g would have a return period of 475 years (10% of occurrence in 50 years) at the Pogo mine site. Therefore, Seismic design criteria used by AMEC during the original design (0.05g for operation, 0.1g for closure phase) are considered reasonable and accepted for use in this analysis. **Table 3.3** summarizes the design criteria used for stability analysis. SRK also conducted sensitivity analysis by increasing the PGA up to 0.2g for the most critical failure mode (Deep Failure through GPA).

Table 3.3: Design Criteria for Stability Analyses

Project Phase	Static Loading Factor of Safety	Pseudo-static/Dynamic Loading Factor of Safety
Operations	1.5	1.1, using k = 0.05g
Closure	1.5	1.1, using k = 0.1g

3.4.2 Material Strength Parameters

Table 3.4 compares material parameters used in this analysis and those used in the original DSTF design report. In the original design report, zero strength was assumed for the GPA. SRK assumed that GPA has frictional strength due to the addition of waste rock.

Table 3.4: Material Properties Used for Stability Analysis

Material Type	Source	Bulk Unit Weight kg/m^3	Friction Angle degrees	Cohesion KPa	Basis for Assumptions
Compacted Tailings	AMEC	1810 (Operations) 1714 (Closure)	32	0	**Bulk Unit Weight:** Based on compaction testing of gravity flotation tails prepared to simulate tailings from the Pogo ore milling process. Variance based on assumption 15% MC at closure **Friction Angle:** 80% of the tri-axial compression strength obtained from isotropically consolidated undrained (CIU) tri-axial tests performed on sample flotation tailings prepared to simulate tailings from the Pogo ore milling process. Strength reduction based on anticipated critical failure mode for tailings shell (assumed to be a wedge type failure resulting from passage of direct shear path through tailings shell).
	SRK	1700	32	0	**Bulk Unit Weight:** Average bulk unit weight obtained from compaction tests performed on actual tailings samples between May and September 2010. **Friction Angle:** AMEC value deemed suitable where tailings are used for shell construction based on engineering judgment.
Co-Disposed General Placement Area (Tailings and Mineralized Waste Rock)	AMEC	1810 (Operations) 1778 (Closure)	None	0	**Bulk Unit Weight:** Estimated unit weight of co-disposed materials using lab flotation tails sample and engineering judgment of bulk unit weight of waste rock. Variance based on assumption of 15% MC during operations and 15% MC at closure. **Friction Angle:** Frictional strength was not assigned for conservatism.
	SRK	1850	34	0	**Bulk Unit Weight:** Engineering judgment used to estimate unit weight of co-disposed compacted tailings and waste rock. **Friction Angle:** 2009 tri-axial test data on sample of filtered tailings placed in DSTF.
Rock Shell (Nag Waste Rock)	AMEC	N/A	40	0	AMEC specified compacted tailings for shell construction.
	SRK	2300	38	0	Reflects actual DSTF construction. Engineering judgment used to assign material properties. Slight reduction in rock friction angle for conservatism to allow for variability in rock quality.
Starter Berm & Toe Berm (AMEC design-rockfill SRK assumed use of colluvium for construction since shown on design drawings)	AMEC	2002	40	0	**Bulk Unit Weight**: Engineering judgment using reduction of value presented in Cooke (1993). No geotechnical lab testing completed on Pogo development rock. **Friction Angle**: Based on Leps (1970) for "average rockfill."
	SRK	2000	32	0	AMEC assumed that this structure was constructed from NAG development rock. However, in the absence of an as-built report, SRK assumed these structures were constructed from colluvium as indicated on the design drawings, and used engineering judgment to assign strength parameters.
Overburden Soils	AMEC	2002	36	0	Engineering judgment based on SPT test hole data collected prior to design of the DSTF.
	SRK	2000	32	0	Engineering judgment accounting for potential for increased fines in overburden materials
Bedrock	AMEC	N/A	N/A	0	Bedrock considered much stronger than overburden materials and was therefore not considered in the analyses.
	SRK	2500	40	0	Engineering judgment. Layer used to complete analyzed design section.

3.4.3 Stability Analysis

Stability analyses were completed using the limit equilibrium program SLOPE/W developed by Geo-Slope (version 2007). Analyses were completed using the Morgenstern-Price method of slices and all materials were assumed to be Mohr-Coulomb frictional materials. **Appendix C, Drawing 10** presents the configuration of the proposed expanded 20 Mton DSTF and includes the failure surfaces and phreatic surfaces assessed.

Phreatic Surface

In the 2004 DSTF design report, stability analyses were completed assuming that the phreatic surface would remain within overburden soil foundation materials at a depth of 10 ft below the original ground surface. However, to assess the potential effects of an elevated phreatic surface within the DSTF, SRK performed sensitivity analyses varying the height of the phreatic surface as follows:

- At the same level used in the 2004 DSTF design report (10 ft below the original ground surface);
- At the surface of original ground (~10 ft higher than the phreatic surface used in the 2004 DSTF design report); and
- Well in excess of the crest elevation of the existing central foundation drain and finger drains (at a maximum height of 50 ft above the original ground surface and within the limits of the GPA).

Failure Modes

The four failure modes assessed were:

- Shallow shell failure, typically a planar failure near the surface of the shell and parallel to the slope angle of the shell material;
- Failure of all Shells, typically a shallow rotational failure through all the composite and rock shells;
- Deep failure through GPA, typically a deep rotational failure into the GPA; and
- Deep failure of DSTF, typically a complete failure through the GPA and all the shells.

Sensitivity on Strength Parameter

To assess the impact of reduced frictional strength of the materials, the stability analysis was also completed using 80% of the initial friction angle as shown in **Table 3. 5**.

Table 3.5: Friction Angles of Materials Used for Stability Analysis

Case	Drystack Tailings in The Shell	GPA Materials
Base Case	32 Degree	34 Degree
Reduced by 20%	25.6 degree	32 Degree

3.4.4 Results

The results of analyses are shown in **Tables 3.6, 3.7, and 3.8**. The major findings follow:

- For all cases analyzed, the calculated FoS for possible modes of failure exceeds the specified design criteria;
- For base cases analyzed, the minimum calculated FoS was 1.4 which was associated with a shallow shell failure of Shell 3 under pseudo-static loading conditions with a horizontal acceleration of 0.1g at closure;
- Under all loading conditions, the shallow modes of failure provide the lowest factors of safety. However, shallow planar failure in the outer shell does not compromise stability of material stored in the GPA;
- The analysis also indicates that if the phreatic surface does not develop an elevated profile, the factor of safety associated with failure of GPA materials remains around 2.7 under operational pseudo-static conditions (k = 0.05g);
- The presence of an elevated phreatic surface within the DSTF reduces the FoS associated with a deep failure through the GPA under a pseudo-static load of 0.1g to 2.1, which is well above the design criteria of 1.1; and
- The static and pseudo-static design criteria are met using 20% reduced friction angles.

Table 3.6: Factor of Safety with Phreatic Surface 10 ft Below Surface

Failure Mode	Base Case			Friction Angle of Drystack Tailings in the Shell reduced by 20%			Friction Angle of Drystack Tailings in the Shell and GPA Material reduced by 20%		
	Static	Pseudo-static (k=0.05)	Pseudo-static (k=0.10)	Static	Pseudo-static (k=0.05)	Pseudo-static (k=0.10)	Static	Pseudo-static (k=0.05)	Pseudo-static (k=0.10)
Shallow Shell Failure	1.9	1.7	1.4	1.5	1.3	1.1	1.5	1.3	1.1
Failure of all Shells	2.6	2.1	1.8	2.3	1.9	1.6	2.3	1.9	1.6
Deep Failure Through GPA	3.4	2.7	2.2	3.3	2.6	2.2	2.8	2.2	1.8
Deep Failure of DSTF	5.0	3.6	2.8	5.0	3.6	2.8	3.8	2.8	2.2

Table 3.7: Factor of Safety with Phreatic Surface at Original Ground

Failure Mode	Base Case			Friction Angle of Drystack Tailings in the Shell reduced by 20%			Friction Angle of Drystack Tailings in the Shell and GPA Material reduced by 20%		
	Static	Pseudo-static (k=0.05)	Pseudo-static (k=0.10)	Static	Pseudo-static (k=0.05)	Pseudo-static (k=0.10)	Static	Pseudo-static (k=0.05)	Pseudo-static (k=0.10)
Shallow Shell Failure	1.9	1.6	1.4	1.5	1.3	1.1	1.5	1.3	1.1
Failure of all Shells	2.6	2.1	1.8	2.3	1. 9	1.6	2.3	1. 9	1.6
Deep Failure Through GPA	3.4	2. 7	2.2	3.3	2.6	2.2	2. 8	2.2	1.8
Deep Failure of DSTF	4.7	3.4	2. 7	4.7	3.4	2.7	3.8	2.8	2.2

Table 3.8: Factor of Safety with Phreatic Surface Near Crest Elevation

Failure Mode	Base Case			Friction Angle of Drystack Tailings in the Shell reduced by 20%			Friction Angle of Drystack Tailings in the Shell and GPA Material reduced by 20%		
	Static	Pseudo-static (k=0.05)	Pseudo-static (k=0.10)	Static	Pseudo-static (k=0.05)	Pseudo-static (k=0.10)	Static	Pseudo-static (k=0.05)	Pseudo-static (k=0.10)
Shallow Shell Failure	1.9	1.6	1.4	1.5	1.3	1.1	1.5	1.3	1.1
Failure of all Shells	2.6	2.1	1.8	2.3	1.9	1.6	2.3	1. 9	1.6
Deep Failure Through GPA	3.2	2.5	2.1	3.1	2.5	2.0	2.6	2.1	1.7
Deep Failure of DSTF	4.0	2.9	2.3	3.9	2.9	2.2	3.3	2.4	1.9

4.0 COMPACTION TEST IN MARCH 2011

The previous DSTF OMS Manual describes that “windrows of tailings have to be dozed down and spread within 1 hour” during winter conditions. However, it is not always practical to implement this rule.

In order to evaluate the influence of frozen drystack tailings on the compaction and to establish appropriate compaction procedures during winter season, a compaction test was conducted in March 2011. A technical memorandum was provided by SRK (SRK, 2011b). This section summarizes the results of this test.

4.1 Methodology

Four different scenarios were tested on site to assess the potential impact of time lags between the dumping of tailings material into heaps on the surface of the DSTF and subsequent spreading of that material under freezing conditions. The four time lags tested were 1, 2, 3, and 7 days between the time tailings were dumped on the surface of the DSTF and when material was spread into one foot thick lifts and then compacted with a vibratory roller. Air temperature measured during the test period was between -9 and 27 degrees F.

At each site when the specified time had elapsed dumped materials were spread using a CAT D7 track type dozer to create a one foot thick lift that was approximately 30 ft by 60 ft. Each pad was then subjected to three different of compaction passes (four, six and eight passes) with a CAT CS 563 vibratory compactor (approximately 12 tons operating weight).

The following field measurements and laboratory tests were conducted:

- Soil temperature measurements using a handheld infrared gauge;
- In-situ density and water content measurements using nuclear densometer (ASTM D6983-10);
- Sand cone test (ASTM D1556-07);
- Standard Proctor (ASTM D698-07);
- Moisture content (ASTM D2216); and
- Direct shear test (ASTM D3080).

4.2 Results

4.2.1 Soil Temperatures and Frost Penetration

Table 4.1 summarizes the soil temperature recorded on site. Measured soil temperatures indicate increased frost penetration depth with increased exposure time to freezing conditions. Frost penetration depth ranged from approximately 3 inches from the surface of dumped tailings piles after one day exposure to depths in excess of 3 ft in material heaped for the seven day test. After seven days it is estimated that up to two-thirds (by volume) of tailings material dumped is frozen.

Table 4.1: Summary of Soil Temperature of Dumped Tailings Piles

Trial	Surface Temp (°F)	3' Depth Temp (°F)	5' Depth Temp (°F)
1 Day Trial	31	72	n/a
2 Day Trial	15	36	n/a
3 Day Trial	10	35	42
7 Day Trial	7	30	n/a(1)

Note: 1 Completely frozen at depth and unable to excavate for temperature measurement.

4.2.2 Material Properties and Field Density Measurements

Table 4.2 summarizes the material properties of tailings material placed during the test program. The results show the specific gravity and Standard Proctor values are very consistent and indicative of a well-controlled process in which the filtered tailings are produced. Moisture content results near the surface of dumped tailings steadily decreased with increased exposure time.

Table 4.3 summarizes field density testing results from the nuclear densometer. It indicates a general trend of increasing in situ density as the number of compaction passes increased. Nuclear densometer results also show that compacted density achieved tended to decrease with increasing exposure time. **Table 4.4** shows that the heaps exposed three days or less meet 90% Standard Proctor with a minimum four compaction passes, and one day and two days duration heaps meet 95% Standard Proctor with a minimum six compaction passes.

Table 4.2: Laboratory Tests Results – Material Properties

Trial	Moisture Content			Specific Gravity	Standard Proctor	
	Surface	6” below surface	3’ below surface		Maximum Dry Density (pcf)	Optimum Moisture Content (%)
1 Day	17.9	n/a	17.9	2.56	109.3	15.0
2 Days	20.2	n/a	17.7	2.56	109.3	15.3
3 Days	13.9	16.5	17.2	2.54	109.3	15.7
7 Days	10.5	19.7	16.8	2.55	107.9	16.3

Table 4.3: Field Density Measurements

Duration of Pile Exposure	Compaction Effort Trial	Nuclear Densometer		% to Maximum Dry Density
		Density (pcf)	Moisture (%)	
1 Day	4 Passes	102.0	16.2	93.3
	6 Passes	105.4	15.4	96.4
	8 Passes	105.1	16.7	96.2
2 Days	4 Passes	102.3	16.8	93.6
	6 Passes	103.7	16.1	94.9
	8 Passes	106.4	16.7	97.3
3 Days	4 Passes	98.4	16.8	90.0
	6 Passes	100.6	16.9	92.0
	8 Passes	102.7	17.1	94.0
7 Days	4 Passes	90.0	15.5	83.4
	6 Passes	87.8	15.3	81.4
	8 Passes	86.4	15.6	80.1

4.2.3 Shear Strength

Table 4.5 shows the results of direct shear tests. The tests were completed on re-moulded samples compacted to 90, 95, and 100% Standard Proctor compaction effort. The laboratory results showed a general increase in material friction angle along with compaction effort, and adequate shear strength can be developed in the drystack

tailings at 90% Standard Proctor compaction in comparison with the design criteria of 32 degree in friction angle of drystack tailings.

Table 4.4: Summary of Direct Shear Results

Sample Compaction Effort	Average Dry Density of Specimen (pcf)	Average Cohesion (psf)	Average Friction Angle (degree)
90%	99.0	140	37
95%	105.1	90	39
100%	109.9	60	41

4.2.4 Major Findings from Compaction Test in March 2011

This section summarizes the major findings obtained from the compaction test conducted in March 2011.

- Drystack tailings can be placed in the DSTF within the limits of both GPA and Shell during winter conditions once the appropriate construction procedures are consistently followed.
- Adequate shear strength which exceeds the design criteria can be developed in the drystack tailings at 90% Standard Proctor compaction.
- To achieve 90% Standard Proctor compaction effort during winter/freezing conditions, drystack tailings should be spread within three days of placement and compacted with a minimum of four passes using a 12-ton compactor.

5.0 CONSTRUCTION PROCEDURES

This section describes the construction procedures of the DSTF.

5.1 General Placement Area

Materials are placed on the GPA year-round. This section describes the construction procedures for the GPA including Shell 1 and associated structures.

5.1.1 Shell 1 Construction

The first shell (Shell 1) has been constructed using non-mineralized rock since the commencement of operation. Shell 1 has a width of 100 ft on the 3:1 slope. Non-mineralized rock is dampened and spread into 3-ft loose lift. Then the lift is compacted with three passes of a D7 Dozer.

A temporary single lane haul road may be constructed on the slope of Shell 1.

5.1.2 Flow-Through Drain and Perimeter Preparation

The flow-through drain along the creek will be extended upward as necessary. The specifications of the flow-through drain are described in Section 2.1.1.

The trees, shrubs, and topsoil along the perimeter of DSTF are removed and non-mineralized rock is placed on the slope surface at a thickness of approx. 1 ft. This layer works as water drainage to route the run-off water on the GPA into the flow-through drain.

5.1.3 Drystack Tailings Placement

The drystack tailings is dumped 15-ft apart, and then spread into maximum 12-inch loose lift. Compaction then proceeds with a minimum of four passes of a smooth drum roller having a minimum 12-ton equivalent weight.

Operation During Winter Conditions

During winter season (October to May), some additional work is required:

- Windrows of drystack tailings have to be dozed down and spread within three days; and

- The placement area needs to be regularly cleared to prevent build-up of snow and ice.

Operation in Wet Conditions

During rainy periods, the drystack tailings may become difficult to compact if water is allowed to infiltrate. In order to minimize the adverse effect on compaction, the following actions may be taken:

- Keep tailings placement area as small as possible;
- Prior to placement of tailings in this small area, the saturated and softened surface will be scraped off;
- If the tailings cannot be compacted immediately, then they will not be spread at all, but left in a pile. If the tailings remain in a pile, the rain will generally only penetrate the outer shell of the pile; and
- Once drystack tailings placement in the area is complete, the tailings surface will be smooth, free of water traps, and graded to allow water to run off the surface.

5.1.4 Mineralized Rock Placement

The mineralized rock needs to be encapsulated in the drystack tailings and the following procedures applied:

- The mineralized rock won't be placed within 50 ft from the perimeter of DSTF;
- The mineralized rock is dumped and then spread into 3-feet loose lift. Compaction then proceeds with minimum three passes of a D7 dozer; and
- Once three lifts are placed, the mineralized rock will be covered with two one-foot drystack tailings layers before placing another lift of mineralized rock.

5.2 Shell Area

This section describes the construction procedures for Shell 2 and Shell 3 which consist of non-mineralized rock and drystack tailings.

5.2.1 Construction Period

The previous DSTF OMS Manual (AMEC, 2007) prescribed that the Shell would be constructed during a typical four month summer construction period. However,

compaction test conducted in March 2011 confirmed that the drystack tailings can be compacted appropriately during winter/freezing conditions once the appropriate construction procedures are consistently followed. Pogo began placing drystack tailings during winter months in 2011.

5.2.2 Flow-Through Drain and Toe Berm

The flow-through drain and toe berm for the Shell 2 and Shell 3 have already been constructed. If additional shell(s) are needed, the flow-through drain and toe berm can be sufficiently advanced. The specifications of the flow-through drain are described in Section 2.1.1.

The toe berm is constructed using non-mineralized rock and acts as a foundation for the shells.

5.2.3 Shell Construction Procedures

Shell 2 and Shell 3 are composite shells which consist of compacted drystack tailings and non-mineralized rock placed on the slope surface of the shells. The construction procedures for these shells are as follows:

- Non-mineralized rock is used to form a crest of the shells. Non-mineralized rock is dumped on the slope side of the shells and then spread into 3-ft loose lift. Compaction then proceeds with a minimum of three passes of a D7 dozer. The crest of non-mineralized rock will have a width of 20 ft on the 3:1 slope; and
- The drystack tailings is dumped 15-ft apart within the crest, and then spread into maximum 12-inch loose lift. Compaction then proceeds with a minimum of six passes of a smooth drum roller having a minimum 12-ton equivalent weight. Though adequate shear strength can be developed in the drystack tailings with a minimum of four passes compaction, six passes compaction is applied for Shell construction to minimize the variability of operation.

Operation During Winter Condition

During winter season (October to May), some additional work is required:

- Between November and February, the windrows of drystack tailings have to be dozed down and spread within one day;

- In October and March to May, the windrows of drystack tailings have to be dozed down and spread within three days; and
- The placement area needs to be regularly clear to prevent build-up of snow and ice.

Operation in Wet Conditions

During rainy periods, the drystack tailings may become difficult to compact to achieve the target density if water is allowed to infiltrate. In order to minimize the adverse effect on compaction, the following actions may be taken:

- Prior to placement of drystack tailings, the saturated and softened surface will be scraped off;
- Windrows of drystack tailings have to be dozed down and compacted as soon as possible; and
- If the amount of rainfall begins to reach extreme levels (more than 0.5 inches in 24 hours), placement of drystack tailings in the shell area will be suspended.

6.0 MONITORING

6.1 Geotechnical Monitoring

The compaction of drystack tailings at the Shells is important for overall stability of the DSTF and to ensure volume capacity. It is necessary to achieve a nominal 90% Standard Proctor of the dry density to secure the designed shear strength. The construction procedures for GPA and Shells aim to compact the drystack tailings to achieve a minimum of 90% Standard Proctor of the dry density. The geotechnical monitoring will verify compaction of the drystack tailings during the construction of Shell 2 and Shell 3 for adherence to design standards.

There is no specific monitoring requirement for the drystack tailings placement at GPA, because it can be deduced from the monitoring results at the Shell, and cumulative compaction effort by piling up the lifts can be expected at GPA.

6.1.1 Geotechnical Monitoring for Shell Construction

During construction of Shell 2 and Shell 3, the QA/QC program shown in **Table 6.1** will be implemented.

The location of densometer readings and grab samples will be documented using handheld GPS and indicated on a site plan, and included with the data collected for the QC program. If QC testing is completed by an independent third party technician and soils testing laboratory, only the sand cone testing indicated in the proposed QA plan will be completed at a frequency of every 80,000 tons of tailings placed and compacted within each shell. If QC testing is completed by Pogo personnel, QA testing will be carried out by an independent certified technician and soils testing laboratory.

The results of geotechnical monitoring will be recorded using the data sheet shown in **Appendix A**.

In case the average of in-situ dry densities is less than the target (90% of Standard Proctor), that layer of drystack tailings will be re-compacted until the target dry density will be achieved.

6.2 Annual Survey

A detailed survey of DSTF will be conducted annually in September. The survey data will be compared with the year-by-year plan. If a significant discrepancy is identified, the plan may be updated.

6.3 Reporting

The results of the monitoring described in this section will be reported in the quarterly monitoring reports and annual monitoring report.

Table 6.1: Geotechnical Monitoring Items during Shell Construction

QA/ QC	Test Description	ASTM Method	Test Frequency	Test Procedures	Target
Quality Control Program	In-situ Nuclear Densometer	D6938-10	Every 20,000 tons of tailings placed in each shell	Performed on material placed and compacted in all areas within 24 hours prior to test day. Maximum testing spacing of 30 ft to a target depth of 12 inches. Test density results should be reported in pcf and moisture content in %. Compare results to laboratory Standard Proctor test results.	Avg. Density of 98.1 pcf or 90% Standard Proctor
	Standard Proctor	D698-07		Completed for three equally spaced grab samples from each test area.	N/A
	Moisture Content	D2216		Completed for three equally spaced grab samples from each test area.	N/A
	Grain Size Distribution	D422		Completed for three equally spaced grab samples from each test area.	Verify tailings consistency
Quality Assurance Program(1)	In-situ Nuclear Densometer	D6938-10	Every 80,000 tons of tailings placed in each shell	Performed on material placed and compacted in all areas within 24 hours prior to test day. Maximum testing spacing of 30 ft to a target depth of 12 inches. Test density results should be reported in pcf and moisture content in %. Compare results to laboratory Standard Proctor test results.	As above
	Sand Cone Test(1)	D1556-07		One test for every ten densometer tests completed.	Consistency with ASTM D6938-10 results
	Standard Proctor	D698-07		Completed for three equally spaced grab samples from each test area.	As above
	Moisture Content	D2216		Completed for the three samples collected for the Proctor test.	As above
	Grain Size Distribution	D422		Completed for the three samples collected for the Proctor test.	As above

Note: 1. QA tests, apart from the Sand Cone Test, are not required if the QC program is conducted by a certified, independent lab.

7.0 INSPECTION

7.1 Weekly Inspection

Environmental personnel will conduct visual inspection of the DSTF on a weekly basis. Environmental personnel will look for any unusual physical conditions paying particular attention to:

- Any ponding of water on drystack;
- Evidence of deformation on the slope of the shell; and
- Evidence of excessive erosion or seepage of the slope of the shell.

The results of inspections will be documented using the designated form (see **Appendix B**). If any unusual situation is found, it will be reported to the Maintenance Manager and Safety, Health and Environmental Manager.

7.2 Occasional Inspection

The DSTF will be inspected by Environmental personnel after extreme rainfall (two inches within 24 hours) or an appreciable earthquake (felt by site personnel).

8.0 REFERENCES

AMEC, 2004, Drystack Tailings Facility Geotechnical Design Report.

AMEC, 2004, RTP Dam Design Report.

Teck-Pogo, 2004, Pogo Project Final Feasibility Study

AMEC, 2007, Pogo Mine Drystack Tailings Facility OMS Manual – Revision Two.

Pogo, 2012, Pogo Mine Monitoring Plan.

SRK, 2011a, Pogo Drystack Tailings Facility Expansion Preliminary Study.

SRK, 2011b, Pogo Mine – Findings of Winter Field Program and Preliminary Recommendations for Dry Stack Storage Facility Construction and QA/QC Procedures.

SRK, 20112, Technical Specifications for Pogo Dry Stack Tailings Facility Expansion, Revision 2, December 21, 2011.

SRK, 2012a, Dry Stack Tailings Facility (DSTF) Expansion Detailed Design, February 2012.

Appendix A

DSTF Shell Geotechnical Monitoring Data Sheet

Pogo Mine DSTF Shell Geotechnical Monitoring Data Sheet

Date Tested		Reported by	
Shell No.		Elevation (ft)	
Date Compacted			

GPS Coordinates (degree)			**Map**
Nuclear Densometer Grid			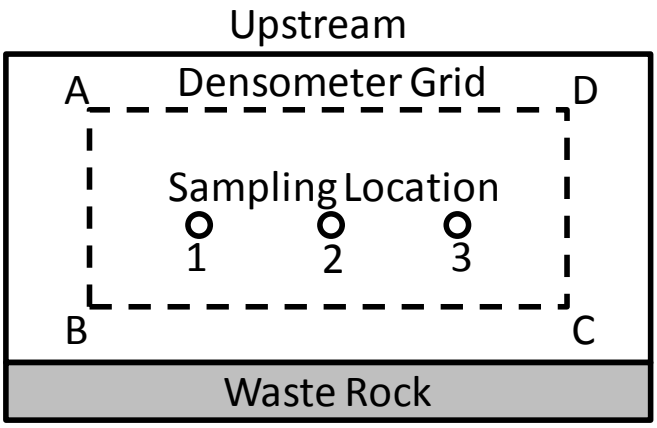
A	N:	W:	
B	N:	W:	
C	N:	W:	
D	N:	W:	
Sampling Location			
1	N:	W:	
2	N:	W:	
3	N:	W:	

Moisture Content / Standard Proctor Test (Three samples per monitoring)				
Sample No.	**1**	**2**	**3**	**Average**
Moisture Content (%)				
Maximum Dry Density (pcf)				
Optimum Moisture Content (%)				

Nuclear Densometer (30 ft grid, Target Depth: 12 inch)			
Number of measurements			
Items	**Minimum**	**Maximum**	**Average**
Moisture Content (%)			
Dry Density (pcf)			
% of Standard Proctor			

Sand Cone Test (One test for every ten densometer measurements) (QA Program)							
Test Hole No.	**1**	**2**	**3**	**4**	**5**	**6**	**Average**
Moisture Content (%)							
Dry Density (pcf)							

Notes: All lab test reports should be attached to this data sheet.

Appendix B

Weekly Inspection Form

Dry Stack Weekly Inspection Log							
Date	Name of Inspector	Observations (Y=observed; N= not observed)					Description of Observation
		Unusual cracks	Bulging	Signs of Settlement	Seepage	Erosion	

Appendix C

Drawings

Note: The year-by-year drawings in this appendix were created assuming the shells would be constructed during the summer season and that 93,000 – 98,000 tons of tailings material would be placed annually at the DSTF. In June 2011, ADNR approved to construct the shells year-round and it will facilitate the shell construction by placing 200,000 – 250,000 tons of tailings material at the drystack annually. The year-by-year drawings will be updated after Pogo completes at least one full winter season of shell construction.